Temperature Sensors with Non-Replaceable Measuring Inserts **TOPGB-1, TTJGB-1, TTKGB-1**

Specification

Temperature range / sensing element

-200÷150ºC	**Pt100**	class B
-40÷150ºC	**K, J**	class 2

Measuring insert

– non-replaceable

Thermowell

– material: stainless steel 1.4541
– length L [mm]: 50÷1500

Connection head

– BA, IP55, -40÷100 ºC

Options

– local display in connection head DANWwin
– Pt500, Pt1000, Ni100, Ni1000, T, N
– other threads (inch and metric) acc. to requirements
– connection heads – stainless steel BEG; aluminium NA,IP65; aluminium NA with snap lock – pp. 157÷158
– Pt100: class A -100÷150ºC, class AA -50÷150ºC; TC: class 1

Additional accessories

– temperature transmitters – pp. 162÷174
– additional protection tubes and thermowells – pp. 148÷153
– hot junction type – p. 13
– compensation cables – p. 145

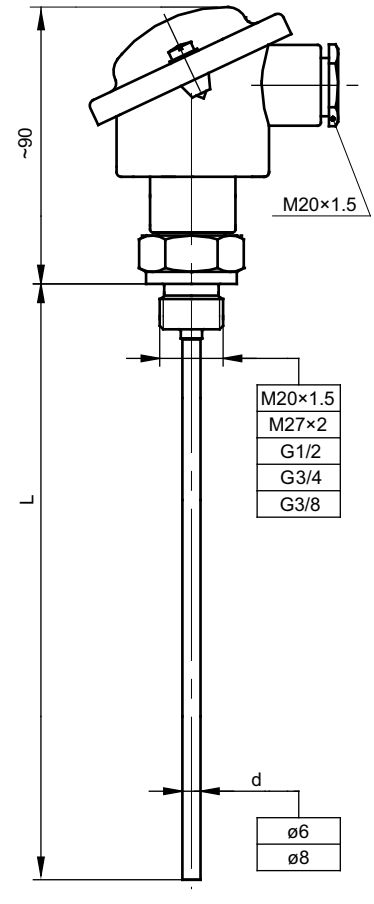

Ordering code

Temperature sensor [ ] [T] [ ] [GB-1] – [ ] – [ ] – [ ] – [ ] – [ ] – [ ] – [ ]

Single: **no designation**
Double: **2**
With transmitter: **AP**
RTD Pt**: OP**
RTD Ni: **ON**
Thermocouple Fe-CuNi: **TJ**
Thermocouple NiCr-NiAl: **TK**
Hot junction type for TC: **SO, SOA, SP**
Thermowell diameter d [mm]: **6** or **8**
Thermowell length L [mm]: **50, 500,** or other*
Thread dimension: **G½; G¾; M20x1,5** or other*
RTD / thermocouple class: **A, B* / 1, 2**
RTD Pt100 connection: **2-, 3-, 4- wire**
Transmitter type – temperature range: **Tx-(0÷400)°C***
*Other parameters acc. to requirements

Ordering example:

TOPGB-1–6–60–G½–B–2 single sensor with Pt100, class B, 2-wire connection, thermowell diameter 6 mm and length L=60 mm, threaded fitting G½

APTTJGB-1–SO–8–600–G¾–1–Tx–(0÷150)ºC single sensor with thermocouple Fe-CuNi /J/, class 1, insulated hot junction SO, thermowell diameter 8 mm and length L=600 mm, threaded fitting G¾, with transmitter 4÷20 mA